REV.	DESCRIPTION	DATE:	ALT. BY	APPROVED
A	CONVERTED TO CAD.	7/28/93	R. COMPTON	
B	ADD MARKING SPEC	5/4/94	RC	
C	CHANGE 8 PIN HOUSING, CRIMP TERMINAL ADD ADDITIONAL 5V, GND CONDUCTORS,	7/25/95	MEB	
D	CHANGE all 22 awg conductors to 20 awg ECO 00-72	10/10/00	MEB	
E	ROHS COMPLIANCE	10.12.06	MEB	

WIRE LIST	
REF.	PIN
W1	8
W2	7
W2	6
W2	5
W3	4
W3	3
W4	2
W5	1

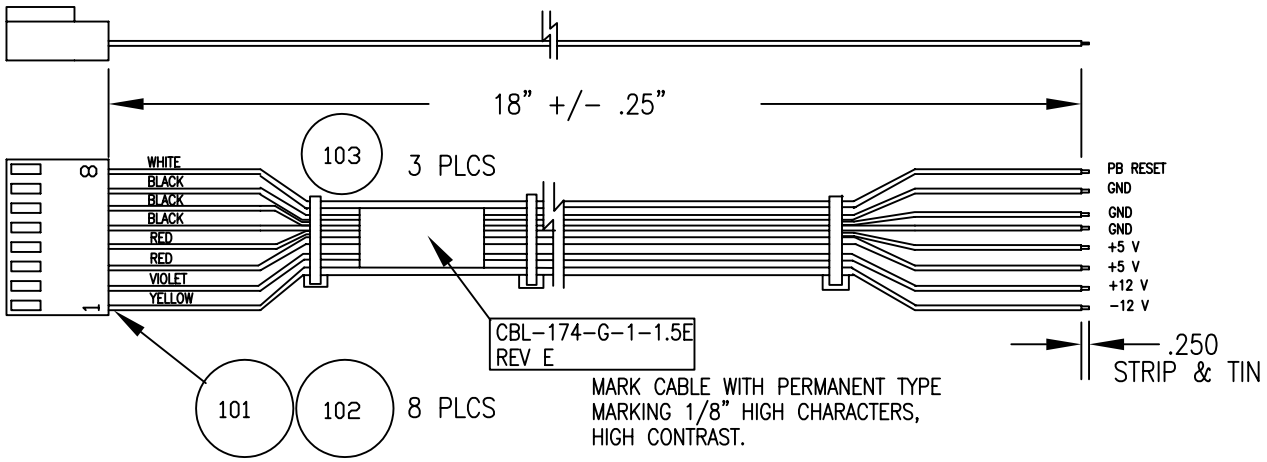

***ALL ALTERNATES MUST BE ELECTRICAL and MECHANICAL EQUIVALENTS to SPECIFIED PARTS, and must be RoHS COMPLIANT.**

RoHS Compliance Notice: All Vendors providing quotations and/or materials to WinSystems, Inc., must supply a RoHS Directive "Certificate of Compliance", referencing the part number(s) of delivered items.

DET.	REF.	DESCRIPTION	MANUFACTURER	MPART NO.	WIN. NO.	-1	100	ROHS
100	EI	QUICK START CBL SAT-V40			CBL-174-G-1-1.5E	1		
101		HOUSING 8 PIN	MOLEX	10-11-2083	201-0008-800		1	ROHS
102		CRIMP TERMINAL	MOLEX	08-55-0124	201-0008-810		8	ROHS
103		WIRE TIE 4"	PANDUIT (MOUSER)	PLT1M-M	500-0050-000		3	ROHS
W1	**	WIRE 20 AWG WHITE	ALPHA	7056/19-1	109-0009-201		18"	ROHS
W2	**	WIRE 20 AWG BLACK	ALPHA	7056/19-2	109-0000-201		54"	ROHS
W3	**	WIRE 20 AWG RED	ALPHA	7056/19-3	109-0002-201		36"	ROHS
W4	**	WIRE, 20 AWG. VIOLET	ALPHA	7056/19-10	109-0007-201		18"	ROHS
W5	**	WIRE, 20 AWG. YELLOW	ALPHA	7056/19-5	109-0004-201		18"	ROHS
**		ALT. WIRE MAY BE USED. STYLE UL1429 / MIL-W-16878D TYPE B						

WinSystems, Inc.

"THE STD BUS AUTHORITY"

TITLE: **RoHS**

CBL-174-G-1-1.5E QUICK START SAT-V40

DRW. BY:	DATE:	APP. BY:	DATE:
M.BROWNING	10.12.06		

ACAD ID:	SCALE:	TOL:
CBL-174-G-1-1.5E	NOTED	

FSCM. NO:	DRW. NO:	REV:	SHT.	OF
		E	1	1

FULL SCALE

100

PART NO.				
TOLERANCE UNLESS NOTED	(0.0) ±	(0.00) ±	(0.000) ±	ANG. ±